PM039

INSTRUCTION MANUAL FOR

RUGER AMERICAN RIFLE®

BOLT-ACTION RIFLE

Standard

Compact

– RUGGED, RELIABLE FIREARMS® –

READ THE INSTRUCTIONS AND WARNINGS IN THIS MANUAL CAREFULLY BEFORE USING THIS FIREARM

© 2018 Sturm, Ruger & Co., Inc.

This manual may not be reproduced in whole or in part without the express written permission of Sturm, Ruger & Co., Inc.

For Service on This Model Please Call:
(336) 949-5200 (See p. 30)

THIS INSTRUCTION MANUAL SHOULD ALWAYS ACCOMPANY THIS FIREARM AND BE TRANSFERRED WITH IT UPON CHANGE OF OWNERSHIP, OR WHEN THE FIREARM IS LOANED OR PRESENTED TO ANOTHER PERSON.

WWW.RUGER.COM

DBA 1/18 R7

State-By-State Warnings

Certain states require by law that their own specified warning notices in larger-than-normal type be conspicuously included by the manufacturer, distributor or retailer with firearms sold in that state. Sturm, Ruger & Co., Inc. sells its products in compliance with applicable laws and regulations. Because our products may be sold in these states, we include the following:

California:

⚠ WARNING

"Firearms must be handled responsibly and securely stored to prevent access by children and other unauthorized users. California has strict laws pertaining to firearms, and you may be fined or imprisoned if you fail to comply with them. Visit the Web site of the California Attorney General at https://oag.ca.gov/firearms for information on firearm laws applicable to you and how you can comply.

Prevent child access by always keeping guns locked away and unloaded when not in use. If you keep a loaded firearm where a child obtains and improperly uses it, you may be fined or sent to prison."

⚠ ADVERTENCIA

"Las armas de fuego deben manipularse de manera responsable y segura para evitar el acceso de niños y otros usuarios no autorizados. California tiene leyes estrictas relacionadas con armas de fuego, y usted puede ser multado o encarcelado si no las cumple. Visite el sitio web del Procurador General de California en https://oag.ca.gov/firearms para obtener información sobre las leyes de armas de fuego que le son aplicables y cómo puede cumplirlas.

A los niños los atraen las armas de fuego y las pueden hacer funcionar. Ellos pueden causarses lesions graves y la muerte. Evite que los niños tengan accesso a las armas de fuego guardándolas siempre con llave y descargadas cuando no las esté utilizando. Si usted tiene un arma de fuego cargada en un lugar en que un niño tiene acceso a ella y la usa indebidamente, le pueden dar una multa o enviarlo a la carcel."

Connecticut:

"UNLAWFUL STORAGE OF A LOADED FIREARM MAY RESULT IN IMPRISONMENT OR FINE."

Florida:

"IT IS UNLAWFUL, AND PUNISHABLE BY IMPRISONMENT AND FINE, FOR ANY ADULT TO STORE OR LEAVE A FIREARM IN ANY PLACE WITHIN THE REACH OR EASY ACCESS OF A MINOR UNDER 18 YEARS OF AGE OR TO KNOWINGLY SELL OR OTHERWISE TRANSFER OWNERSHIP OR POSSESSION OF A FIREARM TO A MINOR OR A PERSON OF UNSOUND MIND."

Maine:

"ENDANGERING THE WELFARE OF A CHILD IS A CRIME. IF YOU LEAVE A FIREARM AND AMMUNITION WITHIN EASY ACCESS OF A CHILD, YOU MAY BE SUBJECT TO FINE, IMPRISONMENT OR BOTH. KEEP FIREARMS AND AMMUNITION SEPARATE. KEEP FIREARMS AND AMMUNITION LOCKED UP. USE TRIGGER LOCKS."

Maryland:

"WARNING: Children can operate firearms which may cause death or serious injury. It is a crime to store or leave a loaded firearm in any location where an individual knew or should have known that an unsupervised minor would gain access to the firearm. Store your firearm responsibly!"

Massachusetts:

"WARNING FROM THE MASSACHUSETTS ATTORNEY GENERAL: This handgun is not equipped with a device that fully blocks use by unauthorized users. More than 200,000 firearms like this one are stolen from their owners every year in the United States. In addition, there are more than a thousand suicides each year by younger children and teenagers who get access to firearms. Hundreds more die from accidental discharge. It is likely that many more children sustain serious wounds, or inflict such wounds accidentally on others. In order to limit the chance of such misuse, it is imperative that you keep this weapon locked in a secure place and take other steps necessary to limit the possibility of theft or accident. Failure to take reasonable preventive steps may result in innocent lives being lost, and in some circumstances may result in your liability for these deaths."

"IT IS UNLAWFUL TO STORE OR KEEP A FIREARM, RIFLE, SHOTGUN OR MACHINE GUN IN ANY PLACE UNLESS THAT WEAPON IS EQUIPPED WITH A TAMPER-RESISTANT SAFETY DEVICE OR IS STORED OR KEPT IN A SECURELY LOCKED CONTAINER."

New Jersey:

"IT IS A CRIMINAL OFFENSE TO LEAVE A LOADED FIREARM WITHIN EASY ACCESS OF A MINOR."

New York City:

"THE USE OF A LOCKING DEVICE OR SAFETY LOCK IS ONLY ONE ASPECT OF RESPONSIBLE FIREARM STORAGE. FOR INCREASED SAFETY, FIREARMS SHOULD BE STORED UNLOADED AND LOCKED IN A LOCATION THAT IS BOTH SEPARATE FROM THEIR AMMUNITION AND INACCESSIBLE TO CHILDREN AND UNAUTHORIZED PERSONS."

North Carolina:

"IT IS UNLAWFUL TO STORE OR LEAVE A FIREARM THAT CAN BE DISCHARGED IN A MANNER THAT A REASONABLE PERSON SHOULD KNOW IS ACCESSIBLE TO A MINOR."

Texas:

"IT IS UNLAWFUL TO STORE, TRANSPORT, OR ABANDON AN UNSECURED FIREARM IN A PLACE WHERE CHILDREN ARE LIKELY TO BE AND CAN OBTAIN ACCESS TO THE FIREARM."

Wisconsin:

"IF YOU LEAVE A LOADED FIREARM WITHIN THE REACH OR EASY ACCESS OF A CHILD YOU MAY BE FINED OR IMPRISONED OR BOTH IF THE CHILD IMPROPERLY DISCHARGES, POSSESSES, OR EXHIBITS THE FIREARM."

* *

Please check with your licensed retailer or state police for additional warnings which may be required by local law or regulation. Such regulations change constantly, and local authorities are in the best position to advise you on such legal matters.

FIREARMS SAFETY IS YOUR RESPONSIBILITY

SAFETY MUST BE THE FIRST AND CONSTANT CONSIDERATION OF EVERY PERSON WHO HANDLES FIREARMS AND AMMUNITION.

This Instruction Manual is designed to assist you in learning how to use and care for your RUGER AMERICAN RIFLE® properly. Please contact us if you have any questions.

Only when you are certain you fully understand the manual and can properly carry out its instructions should you practice loading, unloading, etc. with live ammunition. If you have any doubts about your ability to handle or use a particular type of gun safely, you should seek supervised instruction. Such personalized instruction often is available from local gun retailers, gun clubs or police departments. If none of these sources can help, visit www.nra.org or write to the following address:

National Rifle Association
11250 Waples Mill Road
Fairfax, VA 22030-7400

The person possessing a gun has a full-time job. You cannot guess; you cannot forget. You must know how to use your firearm safely. Do not use any firearm without having a complete understanding of its particular characteristics and safe use. Remember: There is no such thing as a foolproof gun.

TABLE OF CONTENTS

Page

State-By-State Warnings 2
Nomenclature 8
Locking Device Installation Instructions 9
General Information and Mechanical Characteristics 11
Operation of Safety 12
Ammunition 13
To Load and Fire 14
To Unload Rifle and Magazine 16
To Clear a Malfunction ("Jam") 17
To Minimize Malfunctions ("Jams") 19
Basic Disassembly and Reassembly 19
Disassembly 20
Reassembly 24
Care and Cleaning 26
Storage 28
Maintenance of Stainless Steel Rifles 29
Attaching Scope Rings 29
Service and Parts Policy 30
Shipping Firearms for Repair 30
Ordering Parts 31
Parts List 32
Exploded Views . . . . . 34 - 38
The Basic Rules of Safe Firearms Handling 39
Warranty Information 44

"Ruger" is a registered U.S. trademark.

WARNINGS OF GREAT IMPORTANCE ARE FOUND ON THE FOLLOWING PAGES:

Locking Devices	9	Unloading	17
Alterations	11	Malfunctions	18
Manual Safety	13	Disassembly	19
Lead Exposure	13	Lubrication	28
Ammunition	14	Storage	28
Loading	14	Shipping	30
Handling	15	Parts Purchasers	31
Firing	16		

OTHER CAUTIONS AND WARNINGS APPEAR THROUGHOUT THE MANUAL.

NOMENCLATURE

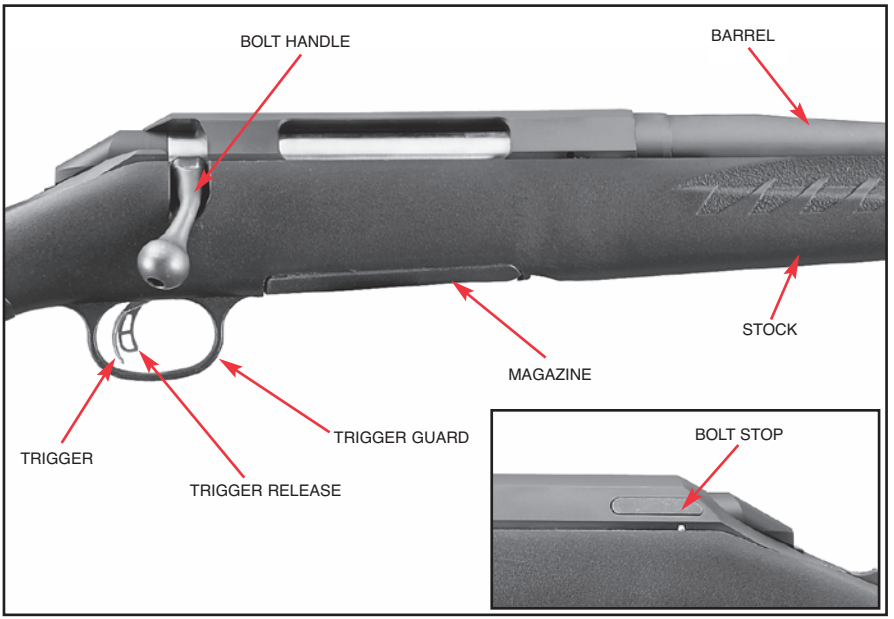

Figure 1. The bolt stop (on the left side of the receiver) permits the bolt to be withdrawn simply by pressing in on the rear of the bolt stop.

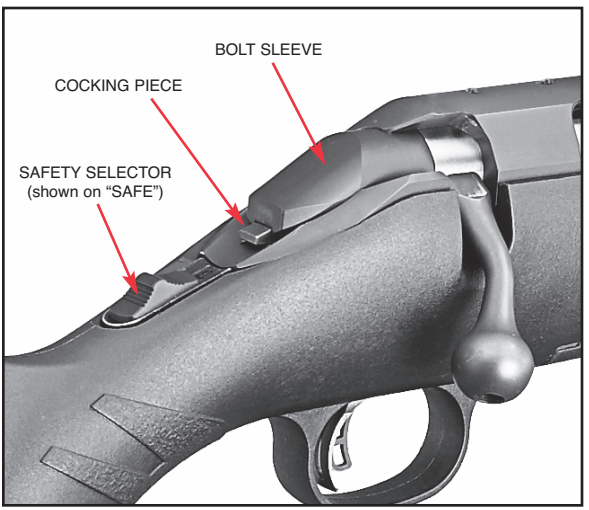

Figure 2. In this photograph the cocking piece is shown cocked (protruding from the rear of the bolt sleeve). (The safety selector should be in the "Safe" position when the bolt is being removed or installed.)

LOCKING DEVICE INSTALLATION INSTRUCTIONS

⚠ WARNING – USE OF LOCKING DEVICES

Do not store keys in lock.

- Always keep your firearm pointed in a safe direction, including when you are installing or removing your locking device.
- Always verify that your firearm is completely unloaded before installing your locking device.
- Do not install locking devices in the trigger guard; always keep your fingers and locking device outside the trigger guard during device installation and removal.
- Store firearms, ammunition and keys separately and securely, away from children and careless adults; do not store your firearm with the keys in the locking device.
- Do not attempt to work the action of your firearm with the locking device in place; this may damage your firearm.
- While locking devices are an important aid to security measures, they are not a substitute for safe firearm handling and proper storage. Remember that any mechanical device can be bypassed with enough time, knowledge, determination and equipment.

LOCKING DEVICES MUST BE USED SAFELY AND RESPONSIBLY

It is important to use the locking device on your Ruger® firearm when the firearm is stored or immediate use is not planned.

Keep the muzzle pointed in a safe direction and your fingers outside the trigger guard at all times!

To Install the Factory-Supplied Locking Device:

1. Place the safety in the "SAFE" position.
2. Remove the magazine by pressing the magazine latch (on the forward end of the magazine) rearward and pulling the magazine down and out of the rifle.
3. Be sure the firearm and its magazine are completely unloaded and contain no cartridges or cartridge cases!
4. Open the action completely by drawing the bolt fully to the rear.

5. Remove the bolt from the rifle. See the “Disassembly” section on page 20.
6. Apply the lock directly to your RUGER AMERICAN RIFLE® rifle as shown below in Figure 3.
7. To lock: With the key turned to the farthest clockwise position, insert the loose end of the cable into the padlock. Turn the key counterclockwise and remove the key.
8. Once the lock is securely closed, pull firmly on the lock to test the connection and be sure it is locked. Do not leave or store your firearm with the key in the lock! Store your locked unloaded firearm and the key in secure, separate locations, away from ammunition, children, and unauthorized adults.

Figure 3

Correct Installation of Cable Lock For RUGER AMERICAN RIFLE®

FIREARMS ARE DANGEROUS WEAPONS

READ THE INSTRUCTIONS AND WARNINGS IN THIS MANUAL THOROUGHLY AND CAREFULLY BEFORE USING.

WARNING–ALTERATIONS

This product was designed to function properly in its original condition. Alterations can make it unsafe. Do not alter any part or add or substitute parts or accessories not made by Sturm, Ruger & Co., Inc.

DO NOT ALTER ANY GUN

GENERAL INFORMATION AND MECHANICAL CHARACTERISTICS

The RUGER AMERICAN RIFLE® is a bolt-action, magazine fed, repeating rifle. The receiver on the RUGER AMERICAN RIFLE® is drilled and tapped for scope mount bases (see the NOMENCLATURE on p. 8).

Other notable features of the RUGER AMERICAN RIFLE® include: a new user-adjustable trigger; two-position tang safety; a fast lock-time fire control mechanism; a detachable rotary magazine; a patent pending bedding system; and studs to which sling swivels can be attached.

The RUGER AMERICAN RIFLE® **Compact Model** has a specially designed stock with a 12.50" length of pull, and an 18" barrel.

An **All-Weather®** version featuring a stainless steel barrel is also available.

The RUGER AMERICAN RIFLE® **Predator and Ranch Models** feature an ergonomic, lightweight composite stock (designed for quick, easy handling) that blends a classic look with modern forend contouring and grip serrations. Both models also feature a factory installed one-piece aluminum scope rail.

OPERATION OF SAFETY

The RUGER AMERICAN RIFLE® has a two-position tang safety. The safety selector is located behind the bolt sleeve. The safety selector can be moved from the "Fire" position to the "Safe" position only when the firing pin is cocked. Fully raising the bolt handle cocks the firing pin. The cocking piece will protrude from the bolt shroud when the firing pin is cocked (see Figure 4).

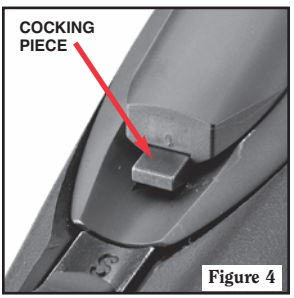

Figure 4

Practice (with an unloaded rifle) moving the safety selector to the two positions until you know the position of the safety selector for the two modes– "Fire" and "Safe." (See Figures 5 & 6.)

WARNING: When manipulating the safety selector, KEEP YOUR FINGERS OUTSIDE THE TRIGGER GUARD! When the safety selector is in the "Fire" position and the trigger is pulled, the rifle will fire.

The safety selector should always be in the "Safe" position except when the user is actually firing the rifle. The safety selector should unfailingly be moved to the "Safe" position when the gun user ceases firing, and remain in the "Safe" position when loading and unloading the rifle.

SAFETY POSITIONS

Figure 5. Safety selector in **"FIRE"** (full forward) position. The safety selector should be moved to this position only when the gun user is actually firing the rifle. When the safety selector is in the fire position, it is referred to as being "off." (When the safety is in the "SAFE" position, it is referred to as being "on.")

Figure 6. Safety selector in **"SAFE"** (full rearward) position. When the safety selector is in this position, the bolt handle can be raised. Keep the safety selector in this position except when actually firing.

If the safety does not function properly, or if the selector seems to move too easily, or if the safety selector does not seem firmly positioned in either the "SAFE" or "FIRE" position, the rifle should be discontinued from use and returned to the Customer Service Department for repair (see p. 30).

⚠ WARNING – MANUAL SAFETY

Keep the safety on unless actually firing. Always move the safety fully to its intended position and check it. The safety has two positions –"SAFE" and "FIRE." Never depend on a safety mechanism or any other mechanical device to justify careless handling or permitting the rifle to point in an unsafe direction. The only "safe" rifle is one in which the bolt is open and the chamber and magazine are empty.

KNOW HOW TO USE THE SAFETY

⚠ WARNING – LEAD EXPOSURE

Discharging firearms in poorly ventilated areas, cleaning firearms, or handling ammunition may result in exposure to lead and other substances known to the State of California to cause birth defects, reproductive harm, and other serious physical injury. Have adequate ventilation at all times. Wash hands thoroughly after exposure.

SHOOTING OR CLEANING GUNS MAY EXPOSE YOU TO LEAD

AMMUNITION

The **RUGER AMERICAN RIFLE®** is chambered for many of the most popular factory-loaded cartridges manufactured in accordance with U.S. industry practice. The particular caliber for each rifle is rollmarked on the barrel. Use cartridges only of the designated caliber that is marked on the barrel. Please see "Warning - Ammunition" and "Warning - Loading" on page 14.

AMMUNITION (CARTRIDGES) NOTICE

WE SPECIFICALLY DISCLAIM RESPONSIBILITY FOR ANY DAMAGE OR INJURY WHATSOEVER OCCURRING IN CONNECTION WITH, OR AS A RESULT OF, THE USE IN ANY RUGER FIREARMS OF FAULTY, OR NON-STANDARD, OR "REMANUFACTURED" OR HAND-LOADED (RELOADED) AMMUNITION, OR OF CARTRIDGES OTHER THAN THOSE FOR WHICH THE FIREARM WAS ORIGINALLY CHAMBERED.

WARNING – AMMUNITION

Death, serious injury, and damage can result from the wrong ammunition, bore obstructions, powder overloads or incorrect cartridge components. Even the strongest gun can be blown up by excess pressure. Only use correct ammunition loaded to U.S. Industry Standards. Always wear shooting glasses and hearing protection.

IMPROPER AMMUNITION DESTROYS GUNS

TO LOAD AND FIRE

Practice the important aspects of gun handling described below (with an unloaded rifle) until you can perform each of the steps with skill and confidence. But before loading the rifle, please read completely through this manual, and be certain the muzzle is pointing in a safe direction. Do not load the rifle until you are ready to use it!

(The following procedure assumes a new rifle with the bolt out).

1. Keep the muzzle pointed in a safe direction (see Rule 2, p. 39).
2. Position the safety selector in the "Safe" position (see Figure 6, p. 12).
3. Insert the bolt in the receiver in accordance with "To replace bolt" instructions on Page 26.
4. Lift the bolt handle and draw the bolt fully to the rear.

WARNING – LOADING

Know the caliber of your rifle you are loading and load cartridges of only that caliber into it!

Before loading, be certain the primer of each cartridge is seated flush with, or below, the surface of the cartridge case base. A cartridge discharged by the closing of the bolt can result in possible serious injury to the shooter and those nearby.

If a cartridge does not chamber readily, do not force it. Check the bore and chamber to be certain that each cartridge is the proper caliber and of correct dimensions. If you cannot determine why the cartridge will not fit, clear the rifle of all cartridges and write or call the factory.

The wrong ammunition can destroy your gun and result in serious injury.

BE SURE WHAT YOU LOAD IS CORRECT

Loading the magazine: (Safety should be in "Safe" position.) The rifle may be loaded with the bolt in the open (fully to the rear) or closed position, but loading in the open position is the preferred method because the chamber condition can be readily and continually determined, and it requires less force to insert a loaded magazine into the rifle with the bolt in the open position.

Press the magazine latch (on the forward end of the magazine) rearward and pull the magazine down and out of the rifle. Press cartridges into the top of the magazine with the desired number of cartridges. Insert the magazine into the bottom of the rifle until the magazine latches into place (a click will be heard).

Loading the chamber: (Safety should be in "Safe" position.) Do not chamber a cartridge until you are ready to shoot immediately. After inserting the magazine, push the bolt handle forward. This will strip a cartridge from the magazine and push the cartridge ahead of the bolt into the chamber. Close the bolt handle fully downward and keep the safety fully rearward in the "Safe" position. If it is desired to "top off" the magazine, the magazine may be removed, an additional cartridge loaded into the magazine, and replace the magazine into the rifle.

WARNING – HANDLING

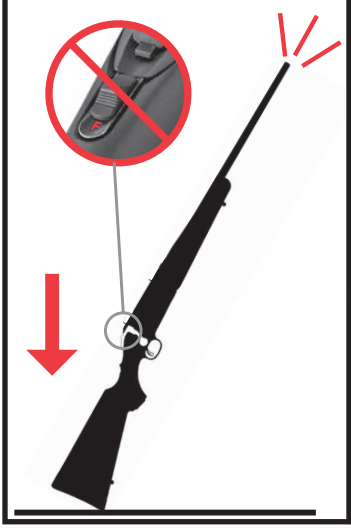

Never carry the rifle loaded with the safety selector in the "FIRE" position. If dropped or struck with the safety off, the rifle may fire. Such a discharge can occur with or without the trigger being directly struck or touched. Never rest a loaded rifle against any object (wall, fence, vehicle, tree, etc.) because there is always the possibility that the rifle will be jarred or slide from its position and fall with sufficient force to discharge. Keep safety on unless actually firing.

ANY GUN MAY FIRE IF DROPPED

WARNING: DO NOT TOUCH THE TRIGGER UNTIL YOU ARE ACTUALLY READY TO FIRE THE RIFLE.

To single-load: (Safety should be in "Safe" position.) Place a cartridge directly into the chamber and close the bolt. An empty, partially loaded, or fully loaded magazine may then be inserted into the rifle if desired.

To fire the rifle: When a cartridge is chambered and the rifle is pointed in a safe direction, put the safety in the "Fire" position. Pulling (squeezing) the trigger will discharge the cartridge. Always be certain that you know where the bullet will strike when you fire the rifle. Never allow the thumb to touch the cocking piece when firing as it can be pinched when the cocking piece moves forward to fire the rifle.

WARNING – FIRING

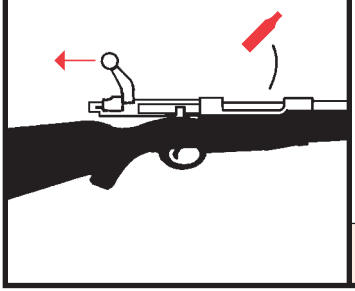

When firing the Ruger American Rifle, be sure that bystanders are well clear of the shooter and standing a safe distance to the rear. Empty cartridge cases are hot and are normally ejected from the rifle to the right. They could cause injury to any person who is standing too closely alongside the shooter. Shooters who fire right-handed rifles from their left shoulder should be particularly cautious concerning ejected cartridge cases and the back of the bolt as it is drawn rearward.

EJECTED BRASS IS HOT

TO UNLOAD RIFLE AND MAGAZINE

(Rifle Must Be Pointing in a Safe Direction)

UNLOAD THE RIFLE IMMEDIATELY WHEN YOU ARE FINISHED SHOOTING.

1. Move the safety selector to the "Safe" position if the firing pin is cocked.
2. Remove the magazine by pressing the magazine latch (on the forward end of the magazine) rearward, and pulling the magazine down and out of the rifle.
3. Lift the bolt handle fully and then pull it completely to the rear to eject the chambered cartridge.
4. Inspect the chamber to be certain the cartridge has been extracted. Leave the bolt open.
5. Close the bolt fully.
6. Move the safety selector to the "Fire" position and with the rifle pointed in a safe direction, pull the trigger.

CORRECT UNLOADING SEQUENCE

⚠ WARNING – UNLOADING

Removing the magazine or removing cartridges from the magazine does not prevent the rifle from being fired! When there is a cartridge in the chamber and the safety selector is in the "Fire" position, the cartridge will discharge if the trigger is pulled. It is absolutely essential for the user to know how to completely unload it. "Completely" means emptying the magazine and removing a chambered cartridge. The safety selector should always be in the "Safe" position when the rifle is being unloaded. See the "Operation of Safety" section of this manual, page 12.

GUN WILL FIRE WITH MAGAZINE OUT OR WITH EMPTY MAGAZINE

TO CLEAR A MALFUNCTION ("JAM")

If a jam occurs, immediately put the safety selector in the "Safe" position and be certain the muzzle of the rifle is at all times pointing in a safe direction.

Study the situation to determine the nature of the jam and how best to clear it.

–If a cartridge or fired case is caught between the bolt and the barrel, or against a cartridge that is in the chamber, remove the magazine. Then retract the bolt fully and remove the jammed cartridge or case.

–When attempting to extract a cartridge that is “stuck” in the chamber, do not use any type of tool that is likely to act as a “firing pin” and discharge the cartridge should the tool impact on the primer.

–After clearing a jam, inspect the gun mechanism to determine if dirt might be the cause of the problem. Excess lubricant or grease can cause cartridges to feed sluggishly or fail to extract. An accumulation of grease or dirt on the face of the bolt, under the extractor, in the chamber, or in the magazine can contribute to cartridge feeding problems. See section on “Care and Cleaning” page 26.

–After clearing a jam, inspect all cartridges that have been removed from the gun. Safely dispose of any cartridges which are in any way damaged.

–If it appears that the rifle is not at fault and that the jam was caused by the type of cartridge being used, then try another type.

–Examine your fired cartridge cases. If they have split, blown or bulged heads, stop using that ammunition and promptly return the rifle to the factory for examination.

–If the above procedures do not result in a smooth and reliable feeding firearm, don’t use the rifle. The RUGER AMERICAN RIFLE® can be returned directly to our Customer Service Department for inspection and repair, if required. See the “Service and Parts Policy” section of the manual for packing and shipping information on page 30.

WARNING – MALFUNCTIONS

If a cartridge hangs up, jams, or binds when being chambered or when being fed from the magazine into the chamber, do not attempt to force it into the chamber by pushing or striking the bolt handle.

Most failures of a cartridge to feed or to chamber are caused by improper loading of the magazine or ammunition that is incorrect or defective.

Whatever the cause, the user must, above all, recognize that jams can result in the potentially very dangerous situation of a cartridge discharging before it is chambered. If this occurs, the cartridge case will rupture and its fragments will fly out of the gun with sufficient force to cause injury. Always wear shooting glasses and hearing protection!

STRIKING PRIMER CAN BURST CARTRIDGE

TO MINIMIZE MALFUNCTIONS ("JAMS")

Firearms of all makes and types are susceptible to occasional malfunctioning due to a cartridge not feeding from the magazine to the chamber, or due to a cartridge or fired case not being extracted and ejected.

To minimize the possibility of such occurrences the gun user should:

–Use ammunition of the correct caliber and type which is loaded to U.S. Industry Specifications. Do not use cartridges that are deformed or cartridges that have been reloaded.

–Clean and lubricate the gun in accordance with the instructions in this manual.

–Learn to correctly operate the bolt and how to properly load and empty the chamber and magazine.

–If the mechanism shows signs of not functioning correctly, or if a part is damaged or broken – don't use the rifle. Have it inspected and repaired.

For most repairs, we recommend that Ruger guns be returned to the factory. However, if a gun has a cartridge in it which cannot be removed, then it is a violation of Federal Regulations to ship that loaded gun whether it be by U.S. Mail or by common carrier. Contact our Customer Service Department at 336-949-5200.

BASIC DISASSEMBLY AND REASSEMBLY

WARNING – DISASSEMBLY

Always unload a firearm before cleaning, lubrication, disassembly or assembly.

UNLOAD BEFORE CLEANING

An on-line video demonstrating the disassembly and reassembly of the Ruger American Rifle® can be viewed by going to **Ruger.com/TechTips**.

It is preferable to carry out these procedures on a workbench or table which has a covered top. A piece of shallow nap rug or an old, coarse blanket is an ideal covering. Such a covering not only reduces the chances of the rifle slipping and being scratched, but it serves also to trap pins, plungers and springs that may otherwise get lost. It is advisable to have a container – such as a shoebox – in which each part can be placed as it is removed from the gun.

Before attempting to disassemble the rifle for the first time, study the parts drawing and parts list to become familiar with the relative position, appearance and name of each part. Carry out the disassembly slowly and carefully note the position of the part in the gun before starting to remove it. If a part is under spring tension (such as the Safety Selector, Bolt Stop, Trigger) remove it cautiously and anticipate the direction the spring and plunger are most likely to "jump."

WARNING: If a spring or plunger become lost, do not use a substitute. Springs of correct tension are vital to the safe and reliable performance of firearms. Before starting disassembly, remove the sling, scope and rings and place the rear sight blade in its down flat position.

DISASSEMBLY

(Rifle Must Be Unloaded Prior To Disassembly)

1. Keep the rifle pointed in a safe direction! Put the safety in the "Safe" position if the firing pin is cocked. (See Figure 6, page 12.)
2. CHECK TO BE CERTAIN THAT THE CHAMBER AND MAGAZINE ARE EMPTY. Remove the magazine.
3. **To remove the bolt:** Open bolt and pull to the rear while at the same time pressing on the rear of the bolt stop, which is located on the left side of the receiver on the right-handed version and the right side of the receiver on the left-handed version (see Figure 7). This is as far as you need to dismantle the rifle for a routine cleaning. It is rarely necessary to proceed further.

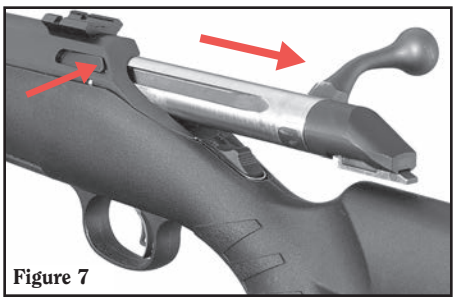

Figure 7

4. **To remove the bolt sleeve:**

NOTE: Do not rotate the cocking piece beyond the positions shown in the instructions. If the cocking piece is turned too far in either direction, it will "fall down" to the bottom of the cocking cams. It will take significant effort, and possibly the use of hand tools or a gripping aid, to return the cocking piece to the correct cam notches. Please note that the cocking piece will only rotate clockwise, relative to the bolt body (when viewed from the rear of the bolt). Because there are dual cocking cams, you may need to rotate the cocking piece up the cams twice in order to return the cocking piece to its proper position.

a. Start with the bolt in the position shown in Figure 8a. You can see the lobe on the cocking piece is at rest inside the notch on the cam.

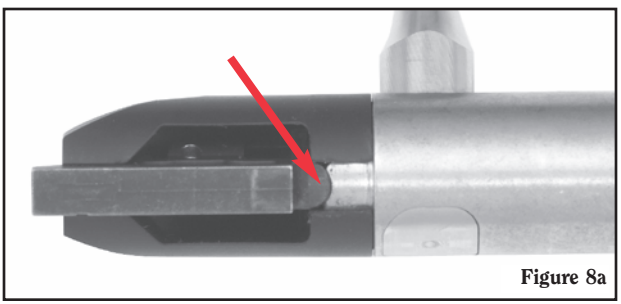

Figure 8a

b. Grasp the outside of the bolt shroud and cocking piece, and rotate approximately 30º as shown so the cocking piece lobe is aligned with the center of the bolt handle base. (See Figure 8b.)

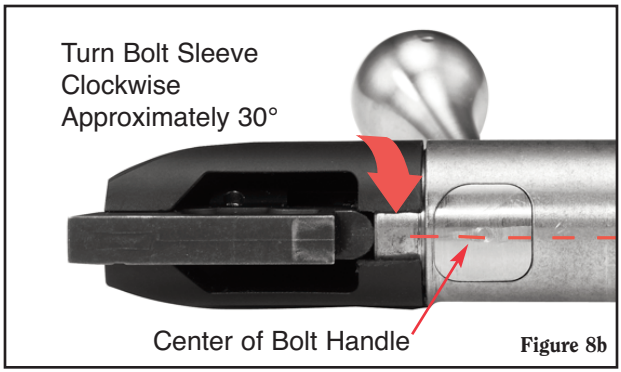

Figure 8b

c. Pull the bolt sleeve rearward. (See Figure 8c.)

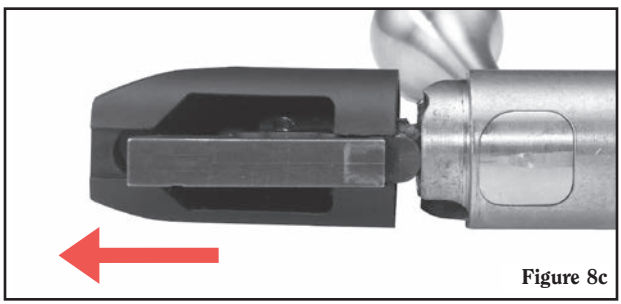
Figure 8c

d. Pull the bolt sleeve down and off. (See Figure 8d.)

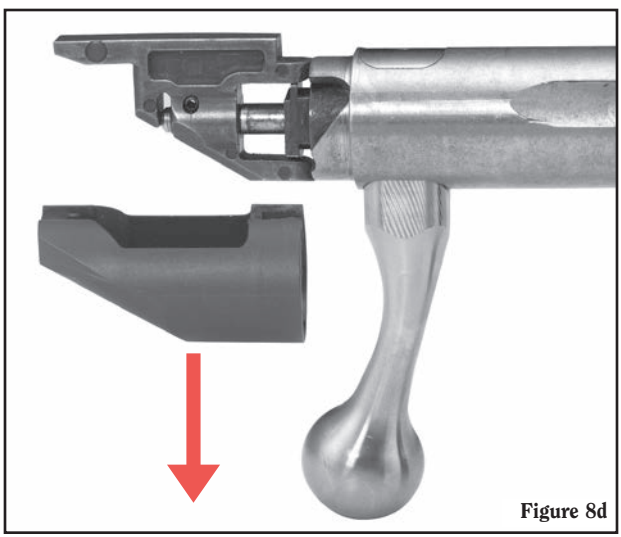
Figure 8d

5. **To remove the barreled action from the stock:**

   a. Use a 3/16" Allen wrench to loosen and remove the two hex-head screws in the bottom of the stock.

   b. Lift the barreled-action out of the stock. (See Figure 9.)

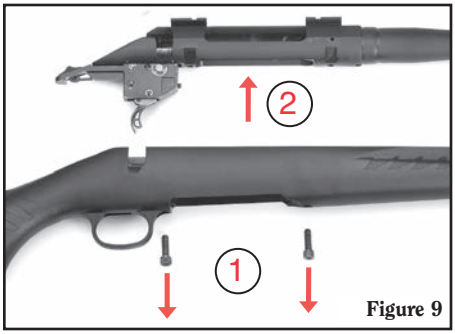

Figure 9

For modular stocks with removable magazine wells:

a. Use a 3/16" Allen wrench to loosen and remove the two hex-head screws in the bottom of the stock.

b. Remove the magazine well.

c. Lift the barreled-action out of the stock. (See Figure 10.)

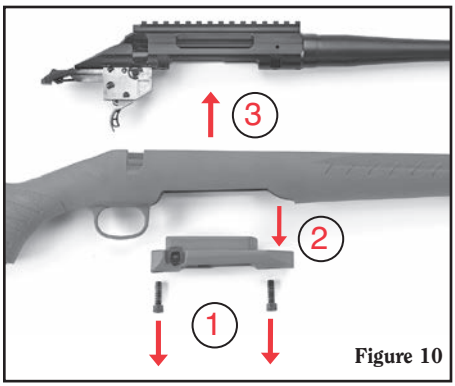

Figure 10

For modular stocks with removable magazine wells that accommodate AI-style magazines: In order to access the rear hex-head screw from the bottom of the stock, you must first remove the magazine latch.

a. With a 1/8" punch, tap out the magazine latch pin. (See Figure 11a.)

NOTE: Cover the magazine latch with a towel to keep the latch and spring from flying out when the latch pin is removed.

b. Remove the magazine latch pin, magazine latch, and spring. (See Figure 11b.)

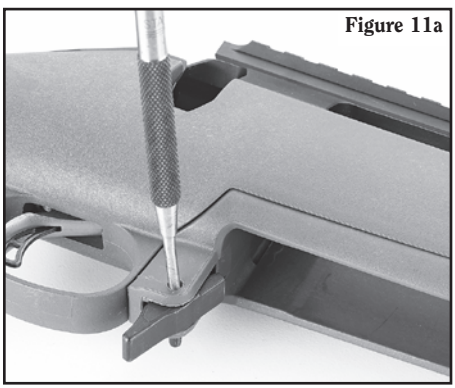
Figure 11a

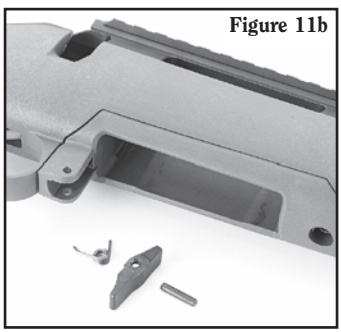
Figure 11b

c. Use a 3/16" Allen wrench to loosen and remove the two hex-head screws in the bottom of the stock.

d. Remove the magazine well.

e. Lift the barreled-action out of the stock. (See Figure 12.)

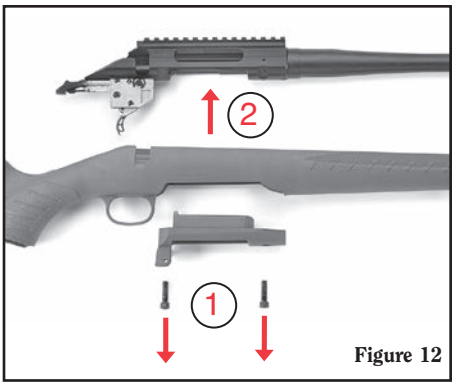

Figure 12

6. **To adjust trigger pull weight:** The trigger pull weight on the RUGER AMERICAN RIFLE® can be adjusted from approximately three pounds to approximately five pounds. We suggest you familiarize yourself with the trigger's pull weight by dry-firing (ensure the magazine is removed, the chamber is empty, and the rifle remains pointed in a safe direction) the rifle after a trigger pull weight adjustment, before live ammunition is fired.

   To access the pull weight set screw, remove the barreled action from the stock. The set screw is located on the outside, forward edge of the fire control housing. (See Figure 13.) The set screw is treated with a thread locking compound and may be difficult to move. Threading the screw in (turning clockwise) will increase the trigger pull weight, threading the screw out (turning counter-clockwise) will reduce the trigger pull weight. (See Figure 13.) Approximately six full turns of the screw represents the entire range of trigger pull weight adjustability. Turning the screw beyond this amount will not further increase or decrease trigger pull weight, and turning the screw too far in may cause the trigger to bind and not function. Turning the screw too far out may prevent the barreled action from reassembling to the stock. **We suggest turning the screw in no more than 1/2 revolution increments and testing the pull weight before further adjustment is attempted.**

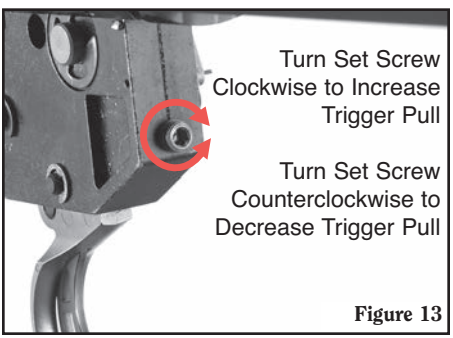

Figure 13

REASSEMBLY
(Again, Be Sure Rifle Is Unloaded)

1. **To replace the stock:**

   a. Place the barreled-action assembly into the stock. Be certain the two angled bedding blocks in the stock fit into the corresponding grooves in the receiver. (See Figure 14.)

Figure 14

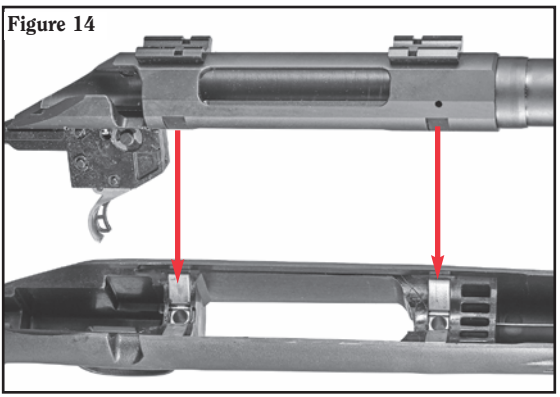

   b. **For modular stocks with removable magazine wells,** insert the magazine well back into the bottom of the stock. (See Figure 10, p. 22.)

   c. Loosely install the screws into the bottom of the stock.

   d. Tighten the two screws as follows: Do not tighten one screw all the way and then the other. Instead, alternately tighten each one – a partial turn at a time – so that the screws will be tightened equally until both are snugly tightened to 60-80 in-lbs.

To replace modular stocks with removable magazine wells that accommodate AI-style magazines:

   a. Follow steps a - d above.

   b. Position the rifle on its side.

   c. Place the magazine latch into the assembly tool as shown in Figure 15.

   d. Insert the magazine latch spring into the open side of the magazine latch with the bent leg of the spring positioned at an angle outside of the assembly tool. (See Figure 15.)

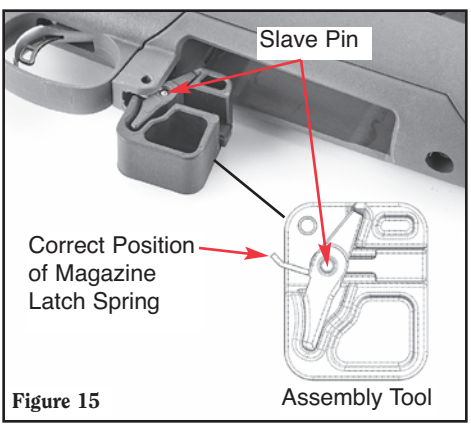

Figure 15

   e. Place the slave pin into the magazine latch to retain the spring. (See Figure 15.)

f. Bring the assembly tool alongside the slot of the magazine well and push it toward the back of the rifle. (See Figure 16.)

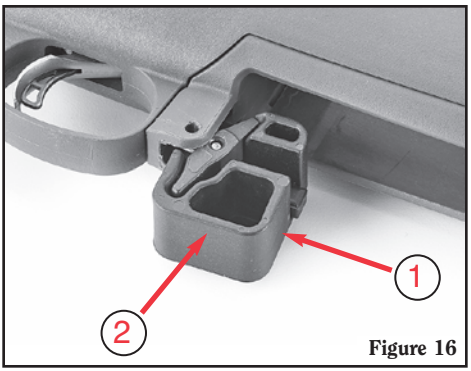

Figure 16

g. When the pin holes align, and with a non-marring hammer, tap the magazine latch pin flush into the magazine latch and spring assembly. (See Figure 17.)

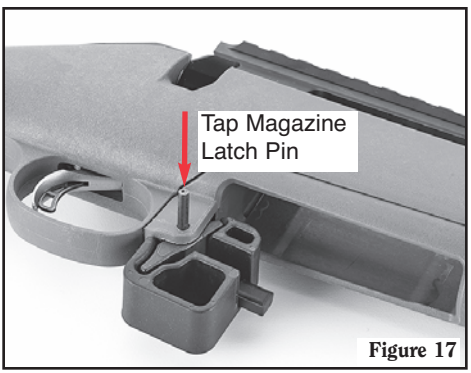

Figure 17

h. The slave pin and assembly tool will drop free after the magazine latch pin has been installed. Keep the slave pin and assembly tool for future use. (See Figure 18.)

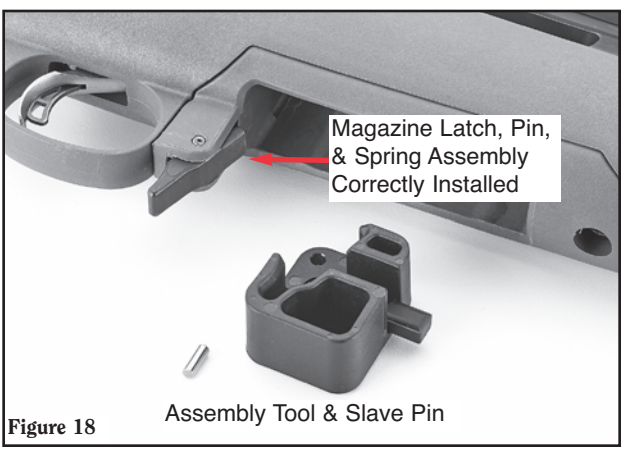

Figure 18

2. **To replace the bolt sleeve:**
   Follow Step 4, page 20, of the Disassembly instructions in the reverse order.

   NOTE: The cocking piece must be aligned with the center of the bolt handle to reinstall the bolt sleeve. (See Figure 8b, p. 21.)

3. **To replace bolt:**
   With bolt handle in an upward position and bolt head away from you, insert the bolt into the receiver and push the bolt fully forward. Cycle the bolt to ensure it is moving smoothly through the receiver.

REGARDING ACCURACY: The accuracy of any rifle can vary depending upon the make and type of cartridges used in it. Such being the case, if your RUGER AMERICAN RIFLE® does not perform to expectations, it is advisable to try several brands and types of cartridges to determine which one delivers the best accuracy, before proceeding further. If your rifle is not as "accurate" as you believe it should be, before concluding that some serious fault exists, run the following checks:

1. Be certain the two bedding screws are snugly tightened to 60-80 in-lbs. as described in Step 1d, p. 24, of the "Reassembly" section of this manual.
2. Be certain the bore is clean and free from accumulated metal fouling (deposited by metal jacketed and lead bullets). See the "Care and Cleaning" section below.
3. Check the scope base and scope ring screws for tightness, setting and alignment.

If everything is tight, the bore is clean, the scope is properly aligned and secure but the accuracy problem persists, DO NOT alter the stock bedding in any way. Do not scrape away wood or polymer and do not bed with "glass," plastic, epoxy, etc. Once a rifle stock has been altered, it cannot be reworked by our Customer Service Department.

If you still have an accuracy problem, write a brief letter to our Customer Service Department in Mayodan, NC and describe the nature of the problem based on the use of factory-loaded cartridges – not reloads. You will receive a prompt response from us and if indicated, detailed instructions with regard to the return of the rifle.

CARE AND CLEANING

WARNING: BEFORE CLEANING, BE CERTAIN THE RIFLE AND ITS MAGAZINE CONTAIN NO CARTRIDGES.

An on-line video demonstrating the care and cleaning of the Ruger American Rifle® can be viewed by going to **Ruger.com/TechTips**.

A firearm must be free of rust, dirt, grease and firing residues to function safely and reliably. Periodic maintenance, which includes inspection of components to determine if they are in proper working order, is absolutely essential. Firing deposits particles of bullet, lubricant and powder in the bore, chamber, bolt,

receiver, magazine and other parts of the rifle. There is no fixed rule as to how frequently the cleaning should be carried out, but the alert gun owner soon learns that any firearm functions most reliably and accurately when it is free of accumulations of grease and other firing residues.

Basic cleaning equipment includes: A correct size cleaning rod equipped with bore brushes (fiber and brass) and a tip in which a cloth patch can be inserted, patches, powder solvent, lubricant, small lint-free cloths and a toothbrush. Use correct size patches and brushes. Larger sizes will bind in the bore and can be very difficult to remove! Insert rod from the chamber end of the barrel and push firmly so the patch or brush emerges from the muzzle. Don't reverse the rod when a brush or patch is being used before the brush or patch exits the muzzle – it may bind. Don't use patches or brushes dripping with solvent or oil. Use rod and brushes with care so as not to damage the gun.

1. For routine cleaning it is necessary only to remove the bolt and magazine.
2. Push-pull a properly sized, solvent-wetted patch through the bore several times. Next, using a solvent-wetted brush, run it the full length of the bore as many times as is necessary to completely remove all foreign matter from the bore and chamber. Dry the bore with clean patches and examine it. If bore remains fouled, repeat the brushing. Complete the cleaning by dry-patch wiping of bore and chamber.
3. Use a clean, solvent-wetted patch to remove firing residue and dirt from all "reachable" surfaces inside the receiver. Use the solvent-wetted toothbrush to dislodge caked dirt from all parts of the bolt assembly and from surfaces inside the receiver that can't be reached with a patch. Use cleaning patches or the cloth to remove the solvent.
4. If lifting the bolt handle becomes difficult or requires more force than usual, remove the bolt shroud (see Disassembly step 4, p. 20) and clean and lubricate the bolt cocking cam surfaces.
5. Wipe all surfaces – internal and external – with a very light coat of oil. Oil and similar preparations "collect" dirt particles which can interfere with reliable functioning of the rifle. Therefore, use these preparations very sparingly. A drop of oil applied to the bolt assembly components, the pivot points of the trigger mechanism, the safety, the bolt stop, and the magazine latch, will work into all the parts that need lubrication.
6. Reassemble the rifle and carefully wipe off all excess solvent, lubricating and preservative preparations from the rifle.
7. If the rifle is to be stored for an extended period, clean the rifle thoroughly. Disassemble to the extent described elsewhere in this manual, taking care to put pins and similar easily mislaid and "rolling" components in a tray. Rewipe all surfaces with preservative oil. Reassemble and store properly.

WARNING – LUBRICATION

Firing a rifle with oil, grease, or any other material even partially obstructing the bore may result in damage to the rifle and serious injury to the shooter and those nearby. Do not spray or apply lubricants directly on ammunition. If the powder charge of a cartridge is affected by the lubricant, it may not be ignited, but the energy from the primer may be sufficient to push the bullet into the bore where it may become lodged. Firing a subsequent bullet onto the obstructed bore may damage the rifle and cause serious injury or death to the shooter and those nearby. Use lubricants properly. You are responsible for the proper care and maintenance of your firearm.

IMPROPER LUBRICATION DESTROYS GUNS

STORAGE

GUNS SHOULD NOT BE STORED LOADED!

USE THE LOCKING DEVICE SUPPLIED WITH THE RIFLE TO RENDER IT INOPERATIVE FOR SAFE STORAGE.
(See Page 9)

Do not store the rifle in a leather case or scabbard. Leather attracts moisture, even though it may appear to be dry.

WARNING – STORAGE

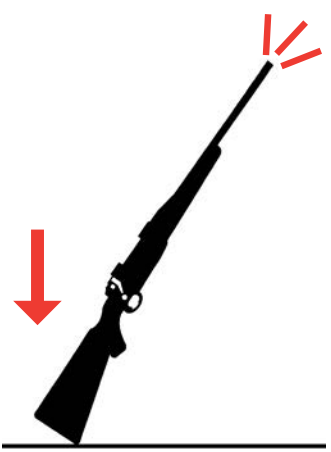

- **Never place or store any firearm in such a manner that it may be dislodged. Firearms should always be stored securely and unloaded, away from children and careless adults.**
- **Use the locking device supplied with the rifle for storage. The use of a locking device or safety lock is only one aspect of responsible firearms storage.**
- **For increased safety, firearms should be stored unloaded in a location that is both separate from their ammunition and inaccessible to children and any other unauthorized person.**

STORE SECURELY & UNLOADED

MAINTENANCE OF STAINLESS STEEL RIFLES

Firearms and components made of stainless steel are relatively more resistant to corrosion than those of blued steel. However, in the interest of proper operation and long life of a stainless steel firearm, inspect it frequently and clean, lubricate and apply an appropriate rust preventative.

Sometimes discoloration occurs from perspiration or from contact with some types of gun cases. Rusting may occur as a result of the firearm being exposed to moisture, salt air or chemicals.

Minor discoloration can usually be removed by rubbing the stainless area with an abrasive ink eraser, crocus cloth, or a "metal polishing" compound. When using any of these abrasives, proceed with care and use light pressure to achieve a blending of "color" with those areas that are not discolored.

External surfaces most subject to rusting from handling, or from exposure to the elements should be cleaned and wiped dry after use or after exposure to adverse conditions. If the rifle is to be stored, coat it with a light film of oil or preservative. Where the rifle is in continuing use, and the presence of oil or grease would be objectionable, then the external surfaces can be coated (after cleaning and drying) with a paste wax formulated for use on metals. Apply the wax sparingly, allow time for it to dry hard, then buff lightly with a soft cloth. When applying the wax, take care that it does not get into the mechanism or on the functioning parts or in the bore.

ATTACHING SCOPE RINGS

The **RUGER AMERICAN RIFLE®** is drilled and tapped for standard scope bases (Weaver #46) which accept a variety of scope rings. Please follow the instructions provided with your rings and bases.

SERVICE AND PARTS POLICY

If you have any question with regard to the performance of your RUGER AMERICAN RIFLE® please write or call (336-949-5200) our Customer Service Department in Mayodan, NC, fully describing all circumstances and conditions involved. If you should return your rifle to the factory for repair, or order parts for it, please comply with the following suggestions for prompt service:

WARNING: BEFORE SHIPPING ANY FIREARM, BE ABSOLUTELY CERTAIN THAT IT AND ITS MAGAZINE ARE UNLOADED. DO NOT SHIP CARTRIDGES WITH A FIREARM.

SHIPPING FIREARMS FOR REPAIR

RUGER AMERICAN RIFLES® returned to the factory for repair should be sent to: Ruger, Customer Service Department, 271 Cardwell Road, Mayodan, NC 27070. **NOTE: You must obtain a Repair Authorization Number before returning your firearm.** An authorization number can be obtained by contacting Customer Service online at **www.ruger.com** or calling the Customer Service Dept. at 336-949-5200. Guns should be sent prepaid. We will not accept collect shipments.

The Federal Gun Control Act, as well as the laws of most states and localities, do not prohibit an individual (who is not otherwise barred from purchasing or possessing a firearm) from shipping a firearm directly to the manufacturer for repair. However, before you ship your rifle to us, be certain that your state or locality does not have a law or regulation which will prohibit you from receiving the rifle from us after it has been repaired. If such receiving is prohibited, then please have a federally licensed firearms dealer ship the gun to us. If your rifle is sent to us by a dealer, it will be returned to that dealer after being repaired. If a handgun (pistol or revolver) is shipped by an individual who does not hold a Federal Firearms License, it must be shipped for overnight delivery via U.P.S., Federal Express or other, similar private overnight service. NOTE: Handguns may not be shipped via U.S. Mail. Persons who do not hold a Federal Firearms License are prohibited by Federal law from shipping a handgun by Mail. Handguns mailed in violation of the law are impounded by the Post Office.

DO NOT SEND GUN BOXES OR LITERATURE THAT YOU CONSIDER TO BE COLLECTOR'S ITEMS – THESE ARE INVARIABLY DAMAGED OR DESTROYED IN SHIPMENT. Please do not include rifle case, sling, telescopic sights or custom accessories with a firearm being shipped to the factory for service. Rifles and shotguns may be shipped via U.S. Mail. Always insure your shipment.

Enclose a letter which includes your name, address, telephone number, serial number, model of the firearm, and your repair authorization number. Describe in detail the trouble you have experienced with your firearm, or the work you wish to have done. Merely stating that the firearm "needs repair" is inadequate information.

All work performed is subject to a minimum labor charge and charges for shipping and handling. Most models can be reblued, but custom gunsmithing service or nonstandard alterations are NOT AVAILABLE from Ruger Customer Service Departments. Please contact the Service Department for pricing information.

WARNING – PARTS PURCHASERS

- It is the purchaser's responsibility to be absolutely certain that any parts ordered from the factory are correctly fitted and installed.
- Firearms are complicated mechanisms and IMPROPER FITTING OF PARTS MAY RESULT IN A DANGEROUS MALFUNCTION, DAMAGE TO THE FIREARM, AND SERIOUS INJURY TO THE SHOOTER AND OTHER PERSONS.
- The purchaser and installer of parts must accept full responsibility for the correct adjustment and functioning of the firearm after such installation.

PARTS MUST FIT CORRECTLY

ORDERING PARTS

Please contact the New Hampshire Customer Service Department for parts availability and current prices. All parts orders for the RUGER AMERICAN RIFLE® should be sent to: Ruger, Customer Service Department, 271 Cardwell Road, Mayodan, NC 27070, 336-949-5200. We cannot comply with open account or C.O.D. requests. Payment in full via credit card (Visa or MasterCard only), money order or certified bank check (no personal checks or cash, please) is required before any service will be performed. Please provide your credit card number, your name as it appears on the credit card, the expiration date, and 3-digit security code. All parts orders are subject to a minimum charge and charges for shipping and handling. Order parts by **Part Name and specify the model and entire serial number** of the firearm for which the parts are being ordered. There is a minimum labor charge plus a shipping and handling charge if the parts are factory fitted. All factory fitted parts are fit on an exchange basis only. We will not return the replaced parts. Please contact the Customer Service Department for pricing information.

Because the receiver of the RUGER AMERICAN RIFLE® is a serial numbered component, it is defined as a "firearm" by Federal law and is not sold as a separate component.

*Parts designated by an asterisk must be factory fitted. These parts are fitted on an exchange basis only. We will not return the replaced parts. We will not return any part that is broken, malfunctioning, badly worn or has been modified. See "Warning — Parts Purchasers," above.

WARNING: Firearm users are cautioned that a gun containing broken, malfunctioning or badly worn parts should not be fired.

RUGER AMERICAN RIFLE®
PARTS LIST

Design, prices and specifications subject to change without notice.

SPECIFY MODEL, CALIBER AND SERIAL NO. WHEN ORDERING

(See Exploded Views Pages 34 - 38)

	Key	Part Name
*	1	**Bolt / Firing Pin Assembly – Complete** **Includes Key Nos. 2 - 17 (See Exploded View p. 35)**
	2	Bolt Shroud
	3	Firing Pin Back
	4	Firing Pin Spring Stop
	5	Firing Pin
	6	Bolt Stop Pin
	7	Bolt Stop Spring
	8	Bolt Stop Lever
	9	Ejector/Firing Pin Back Pin
	10	Ejector Spring
	11	Ejector Plunger, Short Action
	12	Extractor
	13	Extractor Ball
	14	Extractor Spring
*	15	Bolt Body
	16	Bolt Handle
	17	Firing Pin Spring
†	18	Receiver, Long Action
*	19	Barrel Nut
*	20	Barrels
*	21	**Trigger Assembly – Complete** **Includes Key Nos. 22 - 40 (See Exploded View p. 36)**
	22	Safety Button
	23	Sear Spring
*	24	Sear
*	25	Safety Link
	26	Sear Stop Pin
*	27	Trigger Block Pin
	28	Trigger Sear Pin, 2 Req'd
*	29	Safety Shaft
*	30	Safety Spring
*	31	Trigger Housing
	32	Trigger Sear Pin E-Clip, 2 Req'd
	33	Trigger Block Pin E-Clip
	34	Safety Shaft E-Clip

* Parts so marked must be factory fit.

† The receiver is a serial-numbered part and is not offered for sale.

	Key	Part Name
*	35	Trigger Release
	36	Trigger Release Spring
*	37	Trigger
	38	Trigger Release Pin
	39	Trigger Spring
	40	Trigger Adjustment Screw
	41	Trigger Housing Pin, 2 Req'd
	42	Recoil Pad
	43	Sling Swivel Stud
	44	Action Screws, 2 Req'd
	45	Magazine
	46	Stock Assembly
	47	Magazine Well
	48	Magazine Button - AR-Style Magazine Well Magazine Latch - Mini-30 & AI-Style Magazine Well
	49	Magazine Latch Spring
	50	Magazine Latch Pin

* Parts so marked must be factory fit.

RUGER AMERICAN RIFLE®
EXPLODED VIEW

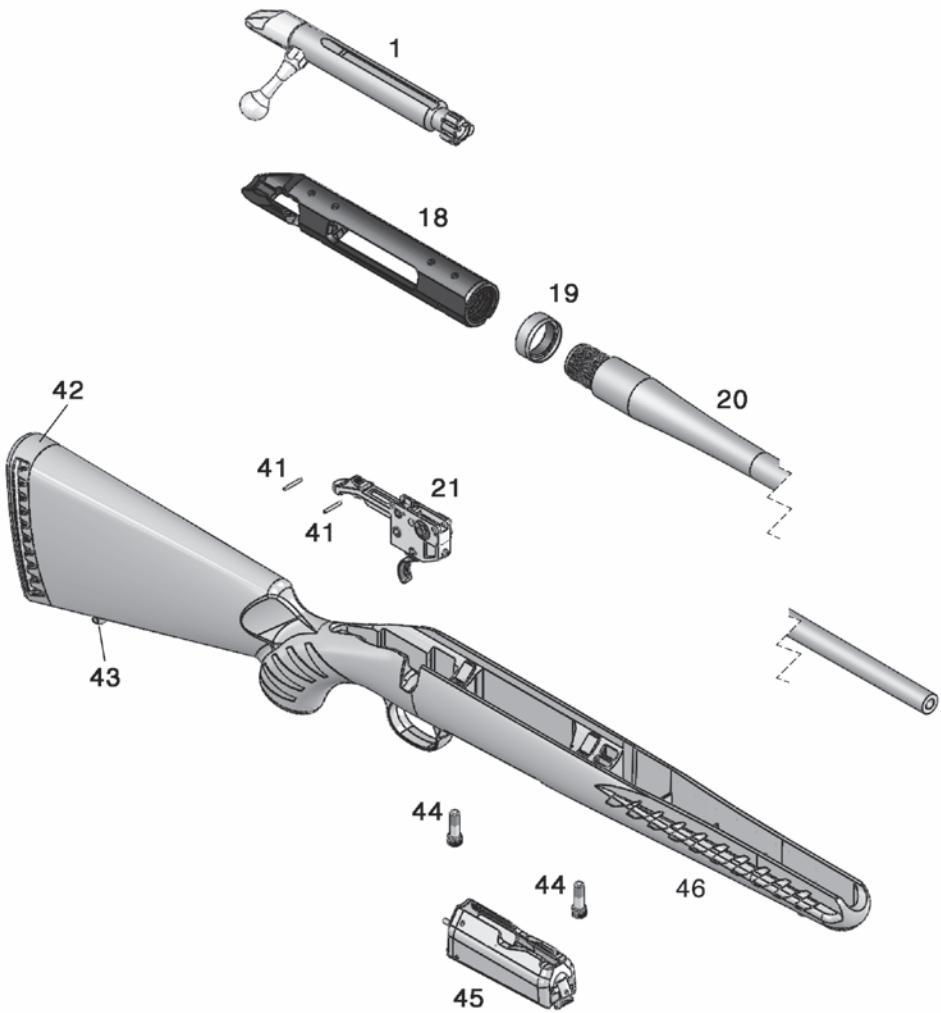

RUGER AMERICAN RIFLE®
FIRING PIN / BOLT ASSEMBLY

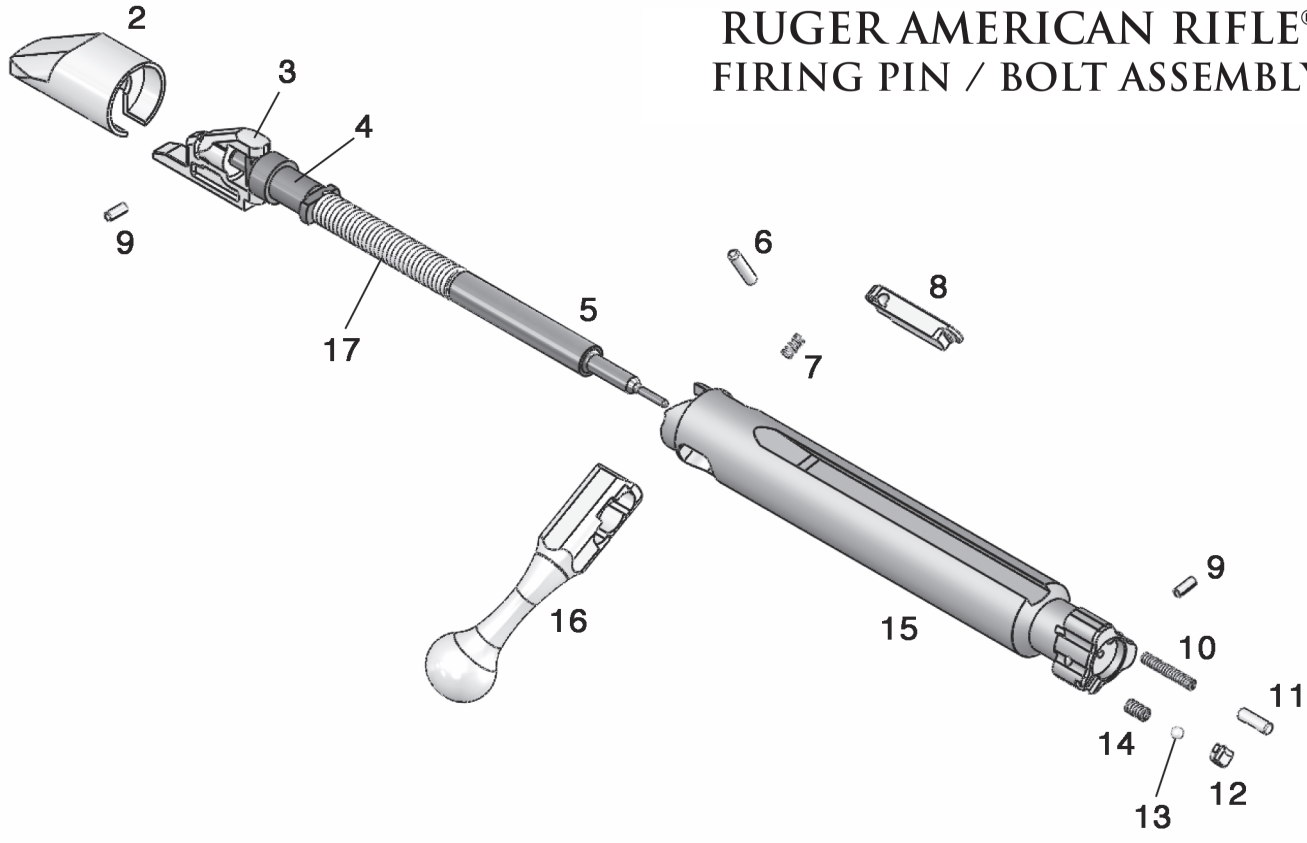

RUGER AMERICAN RIFLE®
TRIGGER ASSEMBLY

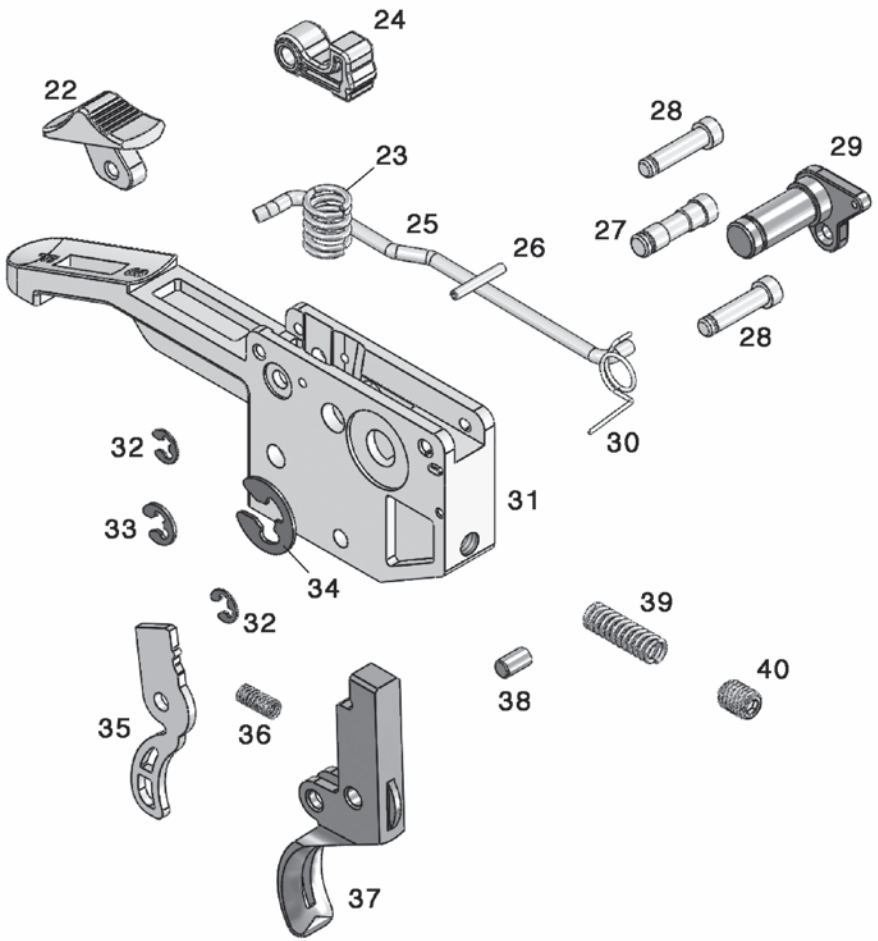

RUGER AMERICAN RIFLE®
MAGAZINES

Key No. 45 – Long Action

Key No. 45 – Short Action

RUGER AMERICAN RIFLE®
MODULAR STOCK & MAGAZINE WELLS

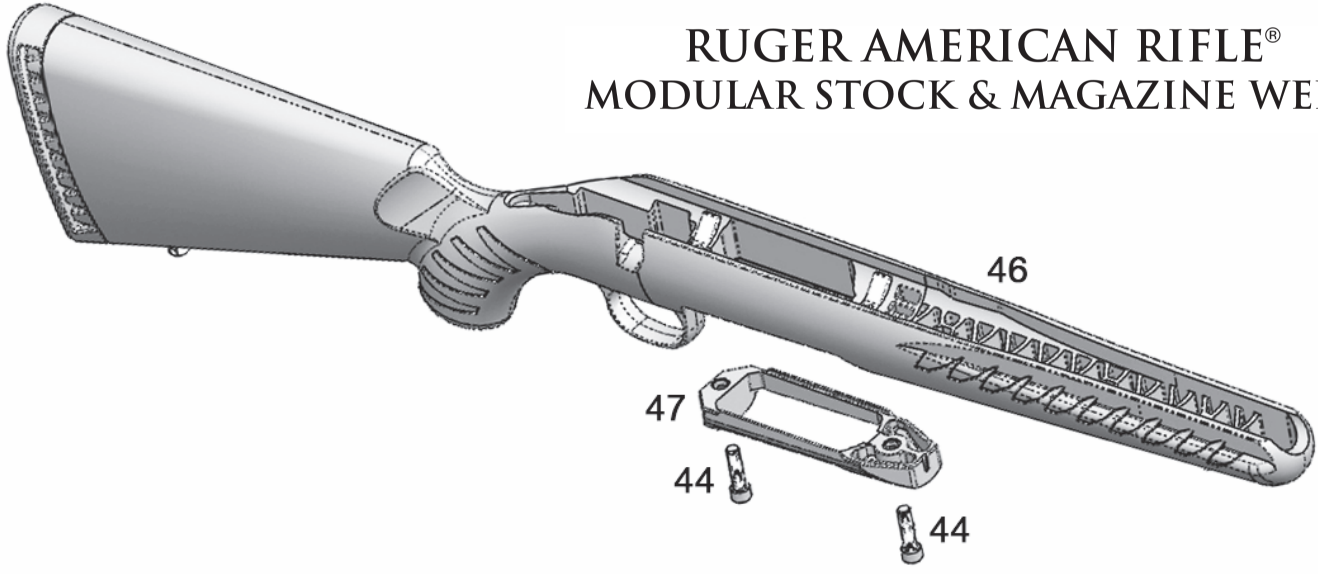

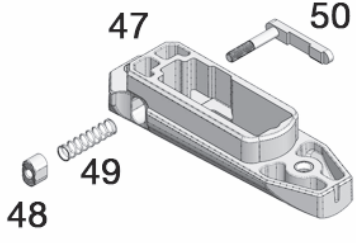

AR-15-Style Magazine Well Assembly

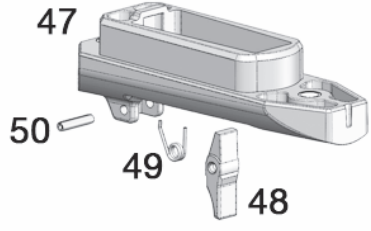

Mini-30 Magazine Well Assembly

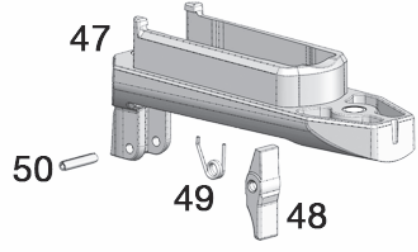

AI-Style Magazine Well Assembly

THE BASIC RULES OF SAFE FIREARMS HANDLING

We believe that Americans have a right to purchase and use firearms for lawful purposes. The private ownership of firearms in America is traditional, but that ownership imposes the responsibility on the gun owner to use his firearms in a way which will ensure his own safety and that of others. When firearms are used in a safe and responsible manner, they are a great source of pleasure and satisfaction, and represent a fundamental part of our personal liberty.

Firearms do not cause accidents! Firearms accidents are almost always found to have been the result of carelessness or ignorance on the part of the shooter of the basic rules of safe gun handling.

The following rules must be observed by gun users at all times. Safe gun handling is not just desirable, it is absolutely essential to your safety, the safety of others, and the continuation of gun ownership and sport shooting as we know it today.

1. LEARN THE MECHANICAL AND HANDLING CHARACTERISTICS OF THE FIREARM YOU ARE USING.

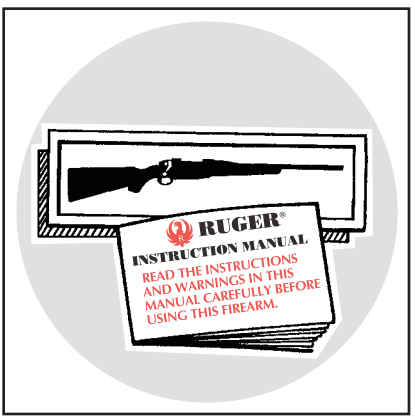

Not all firearms are the same. The method of carrying and handling firearms varies in accordance with the mechanical provisions for avoiding accidental discharge and the various proper procedures for loading and unloading. No person should handle any firearm without first having thoroughly familiarized himself with the particular type of firearm he is using, and with safe gun handling in general.

2. ALWAYS KEEP THE MUZZLE POINTED IN A SAFE DIRECTION.

Be sure of the bullet stop behind your target, even when dry-firing. Never let the muzzle of a firearm point at any part of your body or at another person. This is particularly important when loading or unloading a firearm. In the event of an accidental discharge, no injury can occur as long as the muzzle is pointing in a safe direction. A safe direction means a direction that will not permit a discharged bullet to strike a person, or to strike an object from which the bullet may ricochet.

A safe direction must take into account the fact that a bullet may penetrate a wall, ceiling, floor, window, etc., and strike a person or damage property. Make it a habit to know exactly where the muzzle of your gun is pointing whenever you handle it, and be sure that you are always in control of the direction in which the muzzle is pointing, even if you fall or stumble. Keep your finger off the trigger until you are ready to shoot.

3. FIREARMS SHOULD BE UNLOADED WHEN NOT IN USE.

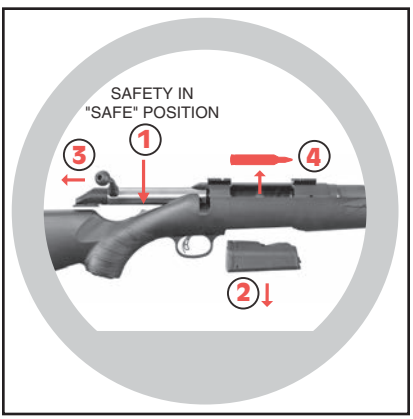

Firearms should be loaded only when you are in the field or on the target range or shooting area, ready to shoot. Firearms and ammunition should be securely locked in safes, racks or cabinets, or by using the locking device supplied with the firearm, when not in use. Ammunition should safely be stored separate from firearms. Store your firearms out of sight of visitors and children. It is the gun owner's responsibility to be certain that children and persons unfamiliar with firearms cannot gain access to firearms, ammunition, or components.

4. BE SURE THE BARREL IS CLEAR OF OBSTRUCTIONS BEFORE SHOOTING.

Even a bit of mud, snow or excess lubricating oil or grease in the bore may cause the barrel to bulge, or even burst on firing, and can cause serious injury to the shooter and bystanders. Be sure that you are using ammunition of the proper caliber and loading for the gun you are using. If the report or recoil on firing seems weak, or doesn't seem quite right, CEASE FIRING IMMEDIATELY, unload your firearm, and check to be sure that no obstruction has become lodged in the barrel. Never try to shoot out an obstruction!

5. BE SURE OF YOUR TARGET BEFORE YOU SHOOT.

Don't shoot unless you know exactly where your bullet is going to strike. Be sure of the bullet stop behind your target, even when dry-firing with an unloaded gun. If you are in the field hunting, do not fire at a movement or noise. Take the time to be absolutely certain of your target before you pull the trigger.

6. WEAR SHOOTING GLASSES AND HEARING PROTECTION WHEN YOU SHOOT.

All shooters should wear protective shooting glasses and adequate hearing protection when shooting. Exposure to shooting noise can damage hearing, and wearing adequate eye protection when shooting is essential.

7. NEVER CLIMB A TREE OR FENCE WITH A LOADED FIREARM.

Put the firearm down carefully before climbing a fence, and unload it before climbing or descending a tree or jumping over a ditch or other obstruction. Never pull or push a loaded firearm toward yourself or another person. When in doubt, or whenever you are about to do anything awkward, unload your gun!

8. DON'T SHOOT AT A HARD SURFACE OR AT WATER.

Bullets can glance off many surfaces like rocks or the surface of water and travel in unpredictable directions with considerable velocity.

9. NEVER TRANSPORT A LOADED FIREARM.

Firearms should always be unloaded before being placed in a vehicle. A suitable carrying case or scabbard should be used to carry an unloaded firearm to and from the shooting area.

10. AVOID ALCOHOLIC BEVERAGES WHEN SHOOTING.

Don't drink until the day's shooting is over. Handling firearms while under the influence of alcohol in any form, or medications that could affect your judgment or coordination, constitutes a criminal disregard for the safety of others.

A BRIEF ACCOUNT OF AN EXTRAORDINARY ACHIEVEMENT: RUGER® FIREARMS

Sturm, Ruger & Company, Inc., had its beginning in a small machine shop occupying a rented frame building in Southport, Connecticut. In January, 1949, with an initial investment of only $50,000 and an idea, William B. Ruger and Alexander M. Sturm started production of a .22 caliber autoloading pistol–a design which was so successful that it became the cornerstone upon which one of the most comprehensive lines of sporting firearms ever made in America was established. After Alex Sturm's death in 1951, William B. Ruger continued to direct the Company until his death in 2002. William B. Ruger, Jr. continued to provide guidance, which helped make this Company a sound and successful enterprise, until his retirement in 2006. The Company has continued to prosper, under new management and guidance from our Board, with new products and fresh perspectives.

Ruger, in this relatively short time, has established itself as a leading small arms design organization, developing a unique and broad line of fine quality sporting, military and police firearms to become one of the world's most famous producers of revolvers, pistols, rifles and shotguns. Since 1949, Ruger craftsmen have built many millions of firearms.

During its five decades of growth and progress under the leadership of William B. Ruger, the Company developed a business philosophy and implemented policies which represent a constructive influence in the life of modern America. From the beginning, Ruger played a positive role in conservation efforts and has supported the interests of shooters through such groups as the National Rifle Association, National Shooting Sports Foundation, and many regional sportsmen's organizations.

The Company has always endeavored to market its firearms for constructive and recreational purposes, to emphasize the traditional and responsible aspects of shooting, to render meaningful public services, and to encourage shooters in constructive, responsible, and safe participation in the shooting sports. Its motto, "Arms Makers For Responsible Citizens®," exemplifies this Company philosophy.

Today, Ruger® is particularly mindful of those elements which have contributed to the creation of its success, and extends heartfelt thanks to its many loyal employees and customers.

The firearms catalog, and instruction manuals for all Ruger® firearms, can be downloaded from our website at:

www.ruger.com

WHY NO WARRANTY CARD HAS BEEN PACKED WITH THIS NEW RUGER® FIREARM

The Magnuson-Moss Act (Public Law 93-637) does not require any seller or manufacturer of a consumer product to give a written warranty. It does provide that if a written warranty is given, it must be designated as "limited" or as "full" and sets minimum standards for a "full" warranty. Sturm, Ruger & Company, Inc. has elected not to provide any written warranty, either "limited" or "full", rather than to attempt to comply with the provisions of the Magnuson-Moss Act and the regulations issued thereunder. There are certain implied warranties under state law with respect to sales of consumer goods. As the extent and interpretation of these implied warranties varies from state to state, you should refer to your state statutes. Sturm, Ruger & Company wishes to assure its customers of its continued interest in providing service to owners of Ruger® firearms.

STURM, RUGER & COMPANY, INC.
271 CARDWELL ROAD
MAYODAN, NORTH CAROLINA 27027 U.S.A.
WWW.RUGER.COM

ARMS MAKERS FOR RESPONSIBLE CITIZENS®

A COPY OF THE INSTRUCTION MANUAL FOR ANY RUGER® FIREARM IS AVAILABLE FROM THE FACTORY FREE ON REQUEST, OR IT MAY BE DOWNLOADED FROM OUR WEBSITE AT WWW.RUGER.COM. THESE INSTRUCTION MANUALS CONTAIN IMPORTANT WARNINGS WHICH MUST BE UNDERSTOOD BEFORE USING THESE FIREARMS.

The Following are Sturm, Ruger & Co., Inc. Trademarks: "BX-Trigger," "Bisley," Eagle Hard "R" logo holding gun, "Elite 452," "Gold Label," "I'm a Ruger American," "LC6," "LCR-357," "LC380CA," "Mark II," "Mark III," "Match Champion," "Model 96," "P345," "P345D," "P345PR," "P85," "P90," "P91," "P93," "P94," "P95," "P97," "R.I.O.S.," "Ruger Marksman Adjustable," "Ruger 77/50," "Ruger 10/17," "Ruger Titanium," "Security-Six," "Service-Six," "77/357," "Single-Seven," "Speed-Six," "SR45," "SR-556C," "SR-556VT," "SR-762," "Super Bearcat," "Target Grey," "10/22-FS," "This is Ruger. This is America.," "Tri-Flex," "22 Charger," "22/45," and "22/45 RP."

The Following are Registered U.S. Trademarks Belonging to Sturm, Ruger & Co., Inc.: "AC-556," "AR-556," "Arms Makers For Responsible Citizens," "All-Weather," "Bearcat," "Blackhawk," "BX-15," "BX-25," Eagle 'R' - soft 'R' & hard 'R'," Eagle 'SR'," "Everything you need and nothing you don't.," "GP100," "Hawkeye," "It's Mine and It's American," "It's Mine. And It's American," "LC380," "LC9," "LC9s," "LC9s Pro," "LCP," "LCR," "LCRx," "M77," "Mini Thirty," "Mini-14," "9E," "Old Army," "Power Bedding," "Redhawk," "RUGER," "Ruger American Pistol," "Ruger American Pistol" flag design, "Ruger American Rifle," "Ruger American Rimfire," "Ruger Hunting" - phrase & logo design, "Ruger Inside & Out" - phrase & logo design, "Ruger Precision Rifle," "Ruger 77/17," "Ruger 77/22," "Ruger 77/44," "Ruger SP101," "Ruger 10/22 Takedown" phrase & logo design, "Ruger 22/45 Lite," "Ruger Vaquero," "Rugged, Reliable Firearms," "Security-9," "Silent-SR," "Single-Nine," "Single-Six," "Single-Ten," the "SR" Design, "SR9," "SR9c," "SR40," "SR40c," "SR-22," "SR22," "SR-556," "SR-556E," "SR-556 Takedown," "SR1911," "Super Redhawk Alaskan," and "10/22."